MOSFET
Types, Operation & Application

Practical Course ELT10140
Control & Assembly of a Power DC Motor

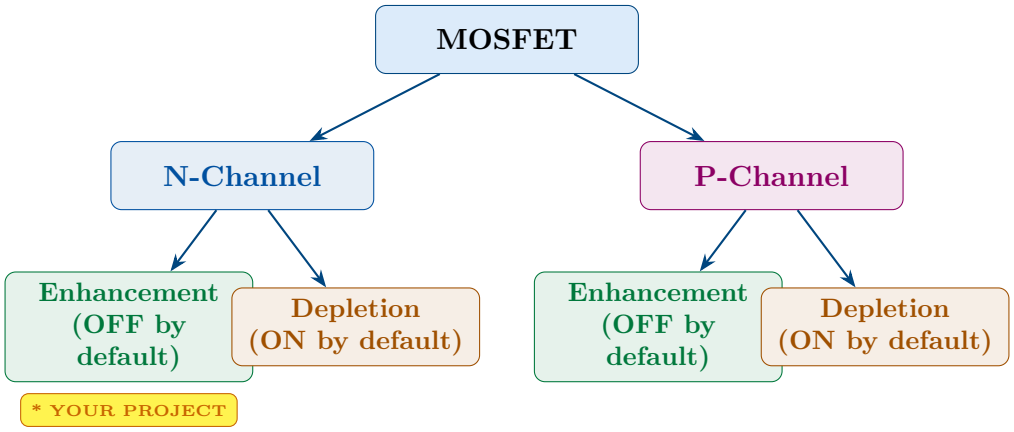

Institution: WHZ Westsächsische Hochschule Zwickau

Course: ELT10140 — Practical Course
Document: MOSFET Reference Sheet
Date: April 1, 2026

Contents

1 What is a MOSFET? 2
1.1 The Three Terminals . . . 2
1.2 The Water Tap Analogy . . . 2
1.3 ON and OFF States . . . 3

2 How a MOSFET Works Internally 3
2.1 The Field Effect Principle . . . 3
2.2 Gate Threshold Voltage — The Danger Zone . . . 3

3 MOSFET Type 1 — N-Channel vs P-Channel 4
3.1 N-Channel MOSFET . . . 4
3.2 P-Channel MOSFET . . . 4
3.3 N-Channel vs P-Channel Comparison . . . 5

4 MOSFET Type 2 — Enhancement vs Depletion Mode 5
4.1 Enhancement Mode . . . 5
4.2 Depletion Mode . . . 5
4.3 Enhancement vs Depletion Comparison . . . 6

5 All 4 MOSFET Types Combined 6

6 MOSFET vs Relay — Why Not Use a Simple Switch? 7

7 MOSFET in Your DC Motor Project 7
7.1 Your Logic Chain — Why Every Component Exists . . . 7
7.2 Complete Circuit Position of MOSFET . . . 8
7.3 IRFZ44N — Your MOSFET Datasheet Summary . . . 8

8 MOSFET with PWM — Speed Control 8
8.1 What the MOSFET Does With PWM Signals . . . 8
8.2 Heat Dissipation . . . 9

9 Complete Quick Reference 10

1 What is a MOSFET?

MOSFET stands for **M**etal **O**xide **S**emiconductor **F**ield **E**ffect **T**ransistor. It is an electronically controlled switch — just like a light switch on a wall, but controlled by voltage instead of a finger, and capable of switching millions of times per second.

1.1 The Three Terminals

Every MOSFET has exactly three terminals:

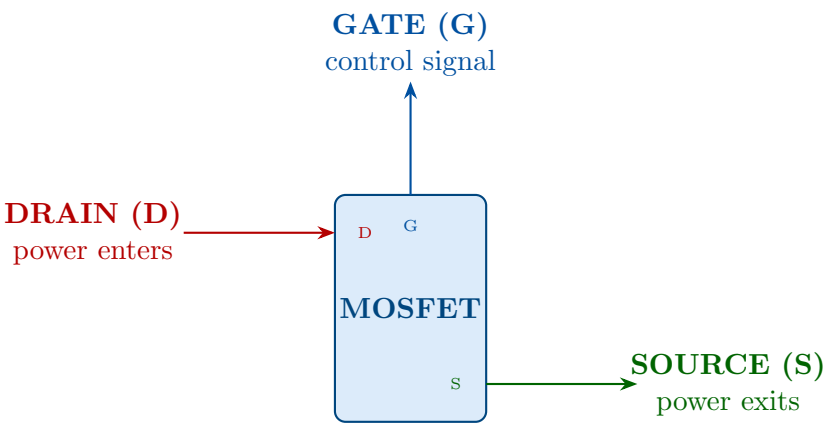

Terminal	Connected To	Function
Drain (D)	Power Supply (+24 V)	Power enters here
Source (S)	Motor (then GND)	Switched power exits here
Gate (G)	Gate Driver (12 V PWM)	Control input — opens/closes the switch

Table 1: MOSFET Terminal Summary

1.2 The Water Tap Analogy

DRAIN	= water pipe coming **IN** (from power supply)
SOURCE	= water pipe going **OUT** (to motor)
GATE	= your hand turning the tap (Gate Driver controls this)

1.3 ON and OFF States

GATE = 0 V → OFF

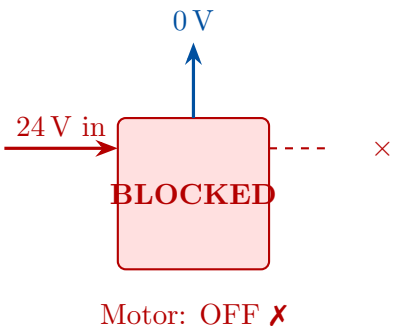

GATE = 12 V → ON

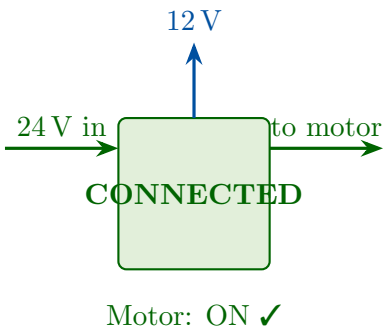

2 How a MOSFET Works Internally

2.1 The Field Effect Principle

The name "Field Effect" comes from the key operating principle:

1. The **Gate** is separated from the semiconductor by a thin **oxide (insulating) layer**
2. When voltage is applied to the Gate, it creates an **electric field**
3. This field **attracts charge carriers** into a channel between Drain and Source
4. The channel **conducts current** — the switch is now ON
5. Remove the gate voltage → field disappears → channel closes → switch OFF

> **Key insight:** Because the Gate is insulated by the oxide layer, **no current flows into the Gate**. The MOSFET is controlled purely by voltage, not current. This makes it very easy for a microcontroller to drive.

2.2 Gate Threshold Voltage — The Danger Zone

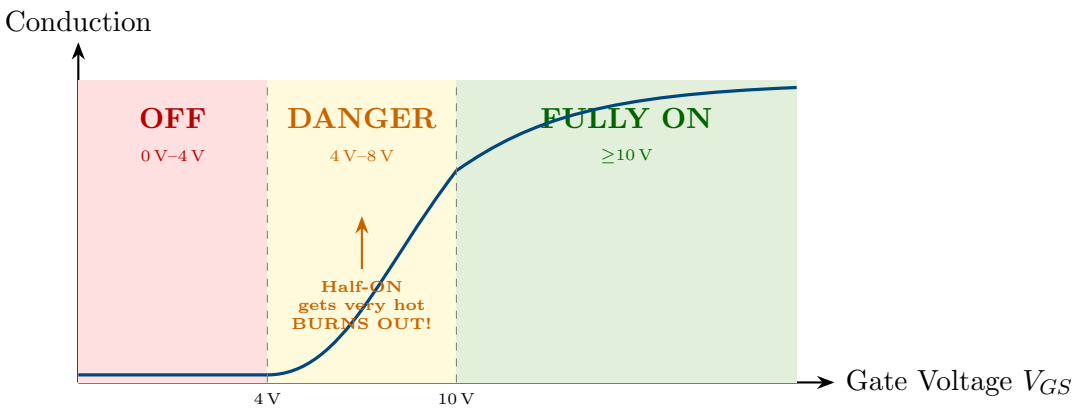

Why the Gate Driver is essential:
Your MCU outputs only 3.3 V. This falls in the danger zone where the MOSFET is partially ON — it behaves like a resistor, dissipates enormous heat, and will burn out. The Gate Driver boosts this to 12 V, ensuring the MOSFET is **fully ON** with minimal resistance and heat.

3 MOSFET Type 1 — N-Channel vs P-Channel

This classification is based on the **type of semiconductor** (and charge carrier) used inside the device.

3.1 N-Channel MOSFET

- Uses **electrons** as charge carriers
- Electrons move **faster** than holes
- Turns ON when Gate is **higher** than Source
- Lower $R_{DS(\text{on})}$ — less heat, more efficient
- Cheaper and more widely available
- **Used in your project** (IRFZ44N)

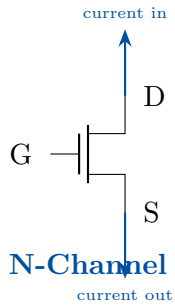

3.2 P-Channel MOSFET

- Uses **holes** as charge carriers
- Holes move **slower** — less efficient
- Turns ON when Gate is **lower** than Source
- Higher $R_{DS(\text{on})}$ — more heat generated
- More expensive
- Used in **high-side switching** applications
- Often paired with N-Channel in H-Bridge circuits

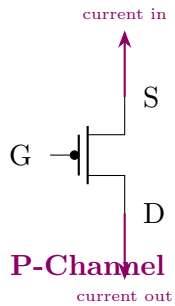

3.3 N-Channel vs P-Channel Comparison

Property	N-Channel	P-Channel
Charge carrier	Electrons (fast)	Holes (slow)
Turns ON when	Gate HIGH (+12 V)	Gate LOW (0 V)
Turns OFF when	Gate LOW (0 V)	Gate HIGH (+12 V)
Efficiency	**Higher**	Lower
$R_{DS(\mathbf{on})}$	**Lower**	Higher
Cost	**Cheaper**	More expensive
Availability	**Very common**	Less common
Typical position	Low-side switch	High-side switch
Your project	✓**Used (IRFZ44N)**	✗Not needed

Table 2: N-Channel vs P-Channel MOSFET

Why N-Channel is preferred: Electrons move approximately 2–3× faster than holes in silicon. This means N-Channel MOSFETs have lower on-resistance ($R_{DS(\text{on})}$), switch faster, generate less heat, and cost less. For a 10.4 A motor drive application, N-Channel is always the first choice.

4 MOSFET Type 2 — Enhancement vs Depletion Mode

This classification is about the **default state** of the MOSFET when no gate signal is applied.

4.1 Enhancement Mode

Default state = OFF. No channel exists when Gate voltage is zero. You must *enhance* (create) the channel by applying a gate voltage.

No Gate Signal (0 V) **Gate Signal Applied (12 V)**

4.2 Depletion Mode

Default state = ON. A channel *already exists* when Gate voltage is zero. You must apply a *negative* gate voltage to *deplete* (destroy) the channel and turn it OFF.

No Gate Signal (0 V) **Negative Gate Signal (−V)**

4.3 Enhancement vs Depletion Comparison

Property	Enhancement Mode	Depletion Mode
Default state	**OFF (safe)**	ON (risky)
To turn ON	Apply positive V_{GS}	Already ON
To turn OFF	Remove gate voltage	Apply negative V_{GS}
Needs negative supply?	**No**	Yes (complex!)
Safe for switching?	**Yes**	No — stays ON if control fails
Common?	**Very common**	Rare
Typical use	Power switching	Current regulators, RF
Your project	**✓Used**	✗Not used

Table 3: Enhancement vs Depletion Mode MOSFET

5 All 4 MOSFET Types Combined

Type	Default	Turns ON	Common?	Used for
N-Ch Enhancement	OFF	$+V_{GS}$	**Very common**	**Power switching * Your project**
N-Ch Depletion	ON	Already ON	Rare	Current regulators, RF
P-Ch Enhancement	OFF	$-V_{GS}$	Common	High-side switches
P-Ch Depletion	ON	Already ON	Very rare	Specialised only

Table 4: All 4 MOSFET Types — Quick Reference

6 MOSFET vs Relay — Why Not Use a Simple Switch?

A mechanical relay is a physical switch controlled by an electromagnet. You might ask: why use a complex MOSFET instead?

Property	Relay	MOSFET
Switching speed	∼10 ms	∼100 ns (100,000× faster)
Max switches/sec	∼50	Millions
PWM capable?	**No**	**Yes**
Wears out?	Yes (mechanical)	No (no moving parts)
Audible noise?	Click sound	Silent
Size	Large	Tiny
Efficiency	Lower	Higher
Verdict	**Impossible for PWM**	**Perfect for PWM**

Table 5: Relay vs MOSFET Comparison

A relay switching at 10 kHz PWM would need to open and close 10,000 times per second. Its mechanical contacts would burn out within milliseconds. **For PWM motor control, MOSFET is the only viable option.**

7 MOSFET in Your DC Motor Project

7.1 Your Logic Chain — Why Every Component Exists

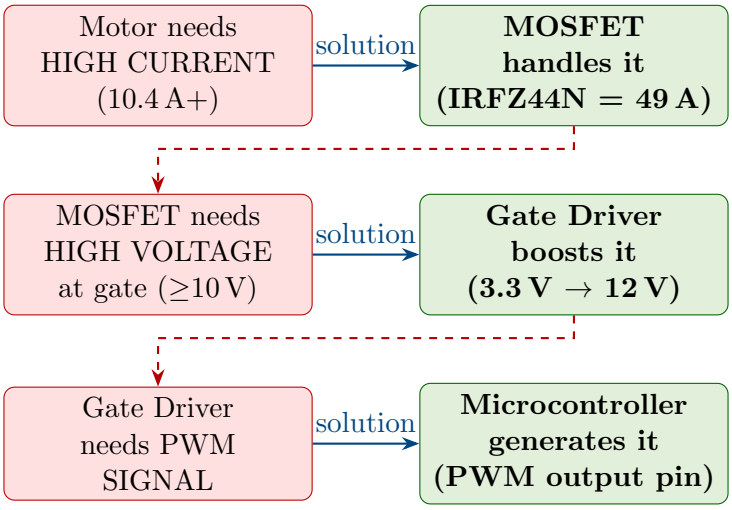

7.2 Complete Circuit Position of MOSFET

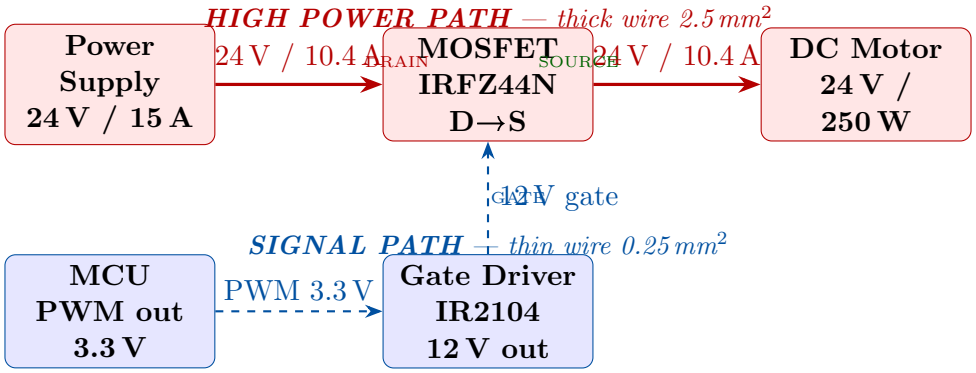

7.3 IRFZ44N — Your MOSFET Datasheet Summary

Parameter	Value	Why it fits your project
Type	N-Ch Enhancement	Correct type — OFF by default
V_{DS} **(max voltage)**	55 V	Your need: 24 V ✓ (> 40 V margin met)
I_D **(max current)**	49 A	Your need: 10.4 A ✓ (×4.7 margin)
$R_{DS(\mathbf{on})}$	17.5 mΩ	Very low — minimal heat loss
Gate threshold V_{th}	2 V–4 V	Fully ON at 12 V ✓
Package	TO-220	Standard, heatsink-compatible
Price	∼€1–2	Very affordable
Heat at full load	$I^2R = 1.9$ W	Heatsink required

Table 6: IRFZ44N Key Parameters

8 MOSFET with PWM — Speed Control

8.1 What the MOSFET Does With PWM Signals

The Gate Driver sends PWM pulses to the MOSFET gate. The MOSFET switches ON and OFF following each pulse:

$$V_{\text{average}} = \text{Duty Cycle} \times V_{\text{supply}} = \frac{t_{\text{ON}}}{t_{\text{ON}} + t_{\text{OFF}}} \times 24\,\text{V} \tag{1}$$

Duty Cycle	V_{average}	MOSFET State Pattern	Motor Speed
100%	24.0 V	Always ON	Full speed
80%	19.2 V	ON 80%, OFF 20%	80% speed
50%	12.0 V	ON 50%, OFF 50%	50% speed
25%	6.0 V	ON 25%, OFF 75%	25% speed
0%	0.0 V	Always OFF	Stopped

Table 7: MOSFET Switching vs Motor Speed

8.2 Heat Dissipation

The MOSFET generates heat from two sources:

1. **Conduction loss** (when fully ON):

$$P_{\text{cond}} = I^2 \times R_{DS(\text{on})} = 10.4^2 \times 0.0175 \approx 1.9\,\text{W} \tag{2}$$

2. **Switching loss** (during each ON/OFF transition): Each transition passes briefly through the partial-conduction danger zone. At 10 kHz: 10,000 transitions/second × small loss each = significant total.

Always attach a heatsink to the MOSFET! Without a heatsink, the MOSFET junction temperature can exceed 150°C and the device will fail. A TO-220 heatsink costs less than €1 and is essential.

9 Complete Quick Reference

Question	Answer
What is a MOSFET?	Voltage-controlled electronic switch
How many terminals?	3: Drain (in), Gate (control), Source (out)
What controls it?	Voltage at Gate (no current needed)
Turn ON voltage (IRFZ44N)	$\geq 10\,\mathrm{V}$ at Gate
Turn OFF voltage	$0\,\mathrm{V}$ at Gate
Type in your project	N-Channel, Enhancement Mode
Part number	IRFZ44N
Max voltage (V_{DS})	$55\,\mathrm{V}$ (you need $24\,\mathrm{V}$)
Max current (I_D)	$49\,\mathrm{A}$ (you need $10.4\,\mathrm{A}$)
On resistance	$17.5\,\mathrm{m\Omega}$
Heat at full load	$\approx 1.9\,\mathrm{W}$ — heatsink required
Where is it in the circuit?	Between Power Supply and Motor (power path)
What controls the Gate?	Gate Driver IC (IR2104)
Why not a relay?	Relay cannot do $10\,\mathrm{kHz}$ PWM switching
Why N-Channel over P-Channel?	More efficient, cheaper, more available
Why Enhancement over Depletion?	OFF by default — safe

Table 8: MOSFET Complete Quick Reference